ARGAL ITALY

2018

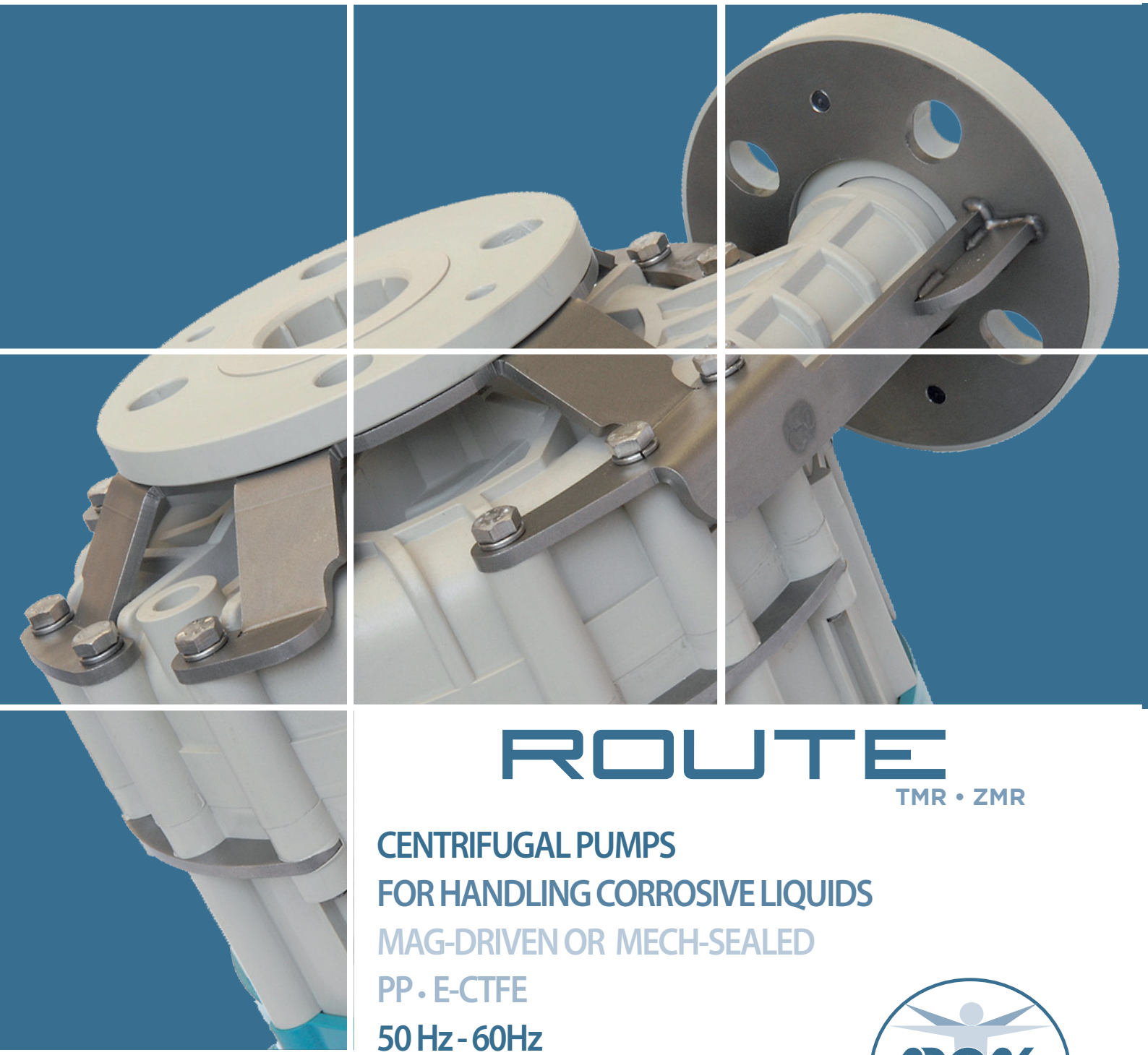

ROUTE

TMR • ZMR

CENTRIFUGAL PUMPS
FOR HANDLING CORROSIVE LIQUIDS

MAG-DRIVEN OR MECH-SEALED

PP • E-CTFE

50 Hz - 60Hz

ARGAL ITALY PUMPS

SINCE 1975

EN

HORIZONTAL CENTRIFUGAL PUMPS

FOR CORROSIVE FLUIDS, CLEAN AND WITH SOLIDS

This series of thermoplastic pumps is available in both magnetic drive setting and mechanical seal for pumping various chemical liquids even if laden with impurities and suspended solids. Mainly by the quantity and quality of these, you can choose the setting that better suits you. A patented system for dry running without damage is available for the magnetic drive "R" version.

WR

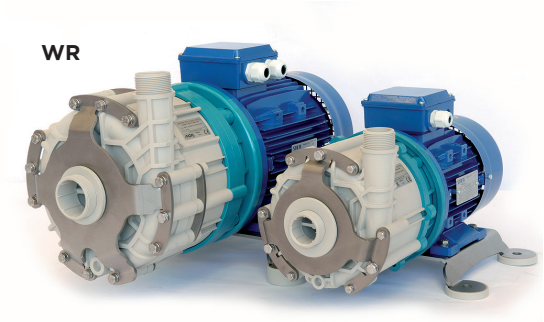

GF

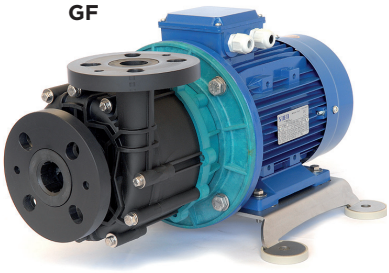

GX

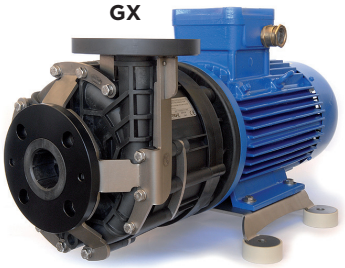

ROUTE TMR

Magnetic-driven close-coupled pumps

ROUTE ZMR

Mechanical sealed close-coupled pumps

CONSTRUCTION

TMR (G2-G3 sizes)	WR	GF	GX*
Volute casing	GFR/PP	CFF/E-CTFE	CFF/E-CTFE
Rear casing			
Centrifugal impeller			
OR gasket	FKM (1)	FKM (1) ; (2)	FKM (1) ; (2)

(1) EPDM and (2) FFKM on request - (*) Compliant to ATEX 94/9/EC

MATERIALS

VERSION	REINFORCED POLYMERS	MIN. TEMP.	MAX TEMP.	ENVIRON-MENT TEMP.
WR	GFR/PP	-5°C (23°F)	80°C (176°F)	0÷40°C (14÷104°F)
GF	CFF/E-CTFE	-20°C (-4°F)	100°C (212°F)	-20÷40°C (-4÷104°F)
GX*	CFF/E-CTFE	-20°C (-4°F)	100°C (212°F)	-20÷40°C (-4÷104°F)

Note: Maximum inlet pressure: 1,5 bar - (*) Compliant to ATEX 94/9/ EC

FOR ALL CHEMICALS

The **ROUTE** pumps are ideal for all chemicals at low and medium temperatures with the bodies made of WR or GF:

- **Loaded fluids, lightly abrasive**

The different internal configurations of the materials allow to pump both clean fluids and with solids in suspension or moderately abrasive.

- **Heavy fluids**

Strong magnetic coupling made of rare-earth materials (Neodimium Iron Boron) and "N" (standard), "P" (powered) or "S" (strongly powered) versions allow to pump liquids with 1.05 - 1.35 - 1.8 specific grativy respectively.

ATEX

ROUTE pumps made of PP or E-CTFE + carbon fiber are perfect for operating into **EXplosive ATmospheres**. They can run in **Group II** areas and **category 1, 2, 3** according to the level of protection. Thanks to the carbon fiber, they are ideal for gaseous atmospheres (**Zone 1, Zone 2**).

MAIN APPLICATIONS

- Water and wastewater treatments
- Surface treatments
- Chemical and pharmaceutical processes
- Lithium battery storage
- Semiconductors
- Photovoltaic

View of stainless steel reinforced flat-face flange connections

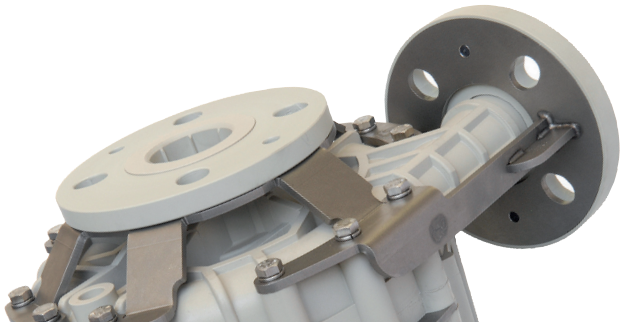

MAGNETIC DRIVE "T"

The mag-driven system excludes any type of rotating seal. The sealing is guaranteed thanks to an O-ring static gasket placed in the connection between the volute casing and the rear casing. It is possible to couple standard motors without disassembling the pump.

GUIDING SYSTEMS

	WR			GF			GX	
TMR (G2-G3 sizes)	**R1**	**X1**	**N1**	**R2**	**X2**	**N2**	**R2**	**N2**
Guide bushing	Carbon HD	SiC	GFR/ PTFE	Carbon HD	SiC	GFR/ PTFE	Carbon HD	GFR/ PTFE
Thrust bush	CER			SiC			SiC	
Shaft	CER			SiC			SiC	

R2 - standard conditions P2 - critical conditions X2 - extreme conditions

DRY-RUNNING PATENTED (OPTIONAL)

The impeller subjected to different hydraulic load is free to move axially. Two rings which are limit devices of its excursion fix the work-space it egages during the standard operation. In case of anomalies due to pressure loss while dry-running, the extra magnetic field calls back the impeller to the neutral position.

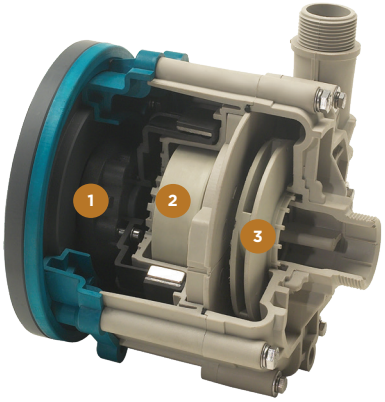

1. Magnetic-driven assembly
2. Centrifugal impeller (magnetic part)
3. Centrifugal impeller (covered type)

MECHANICAL TRANSMISSION "Z"

In the sealed version, the impeller is mounted on the motor shaft and the liquid leakage on the motor is prevented by mechanical seals with the appropriate material. To compare with the magnetic driven version, the mechanical seal allows the pumping of uncleaned liquids, liquids ladened with solids.

MECHANICAL SEALS

CONSTRUCTION	MODEL	ROTATING PART	FIXED RING	BELLOW	WORKING CONDITIONS
INTERNAL SINGLE	BS5	CARBON	CER	FKM	LOW COST (easy maintenance)
	BS7		SiC		
	BS6	SiC	CER		LOW COST HARD PARTICLES (easy maintenance)
	BS8-BF3**		SiC		HARD PARTICLES
EXTERNAL SINGLE	SF1	GFR/PTFE	CER	PTFE	NORMAL USE
	SF2		SiC		
	TS5	CARBON	CER	FKM	
	TS7		SiC		
	TS6	SiC	CER		HARD PARTICLES
	TS8		SiC		
DOUBLE	MSF1	GFR/PTFE	CER	PTFE	CRITICAL
	MSF2		SiC		
	MTS5	CARBON *2nd rotating part CARBON*	CER	FKM	
	MTS7		SIC *2nd: CER*		
	MTS6	SiC	CER		EXTREME
	MTS8		SiC		

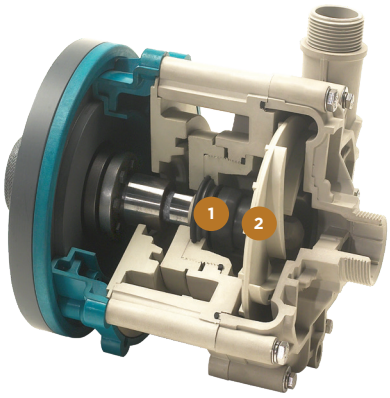

1. Internal mechanical seal
2. Centrifugal impeller (open type)

G3
G2

Curves 2900 r.p.m. -50Hz

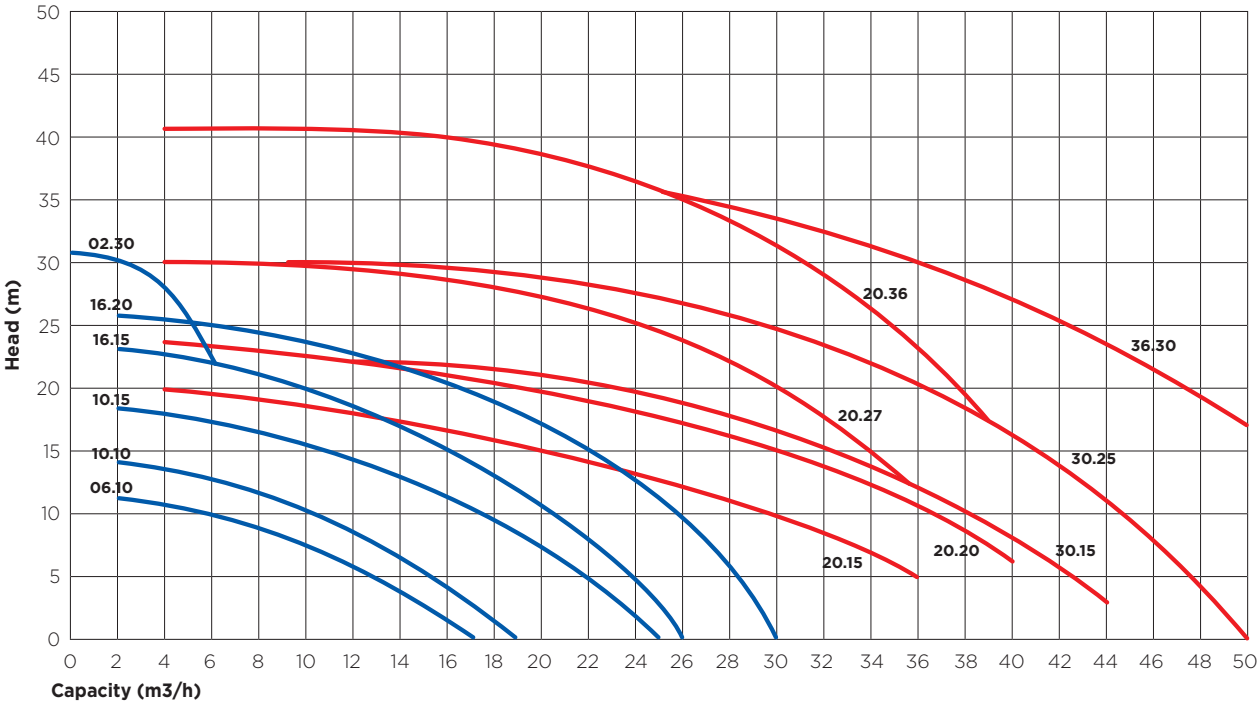

G3
G2

Curves 2900 r.p.m. -60Hz

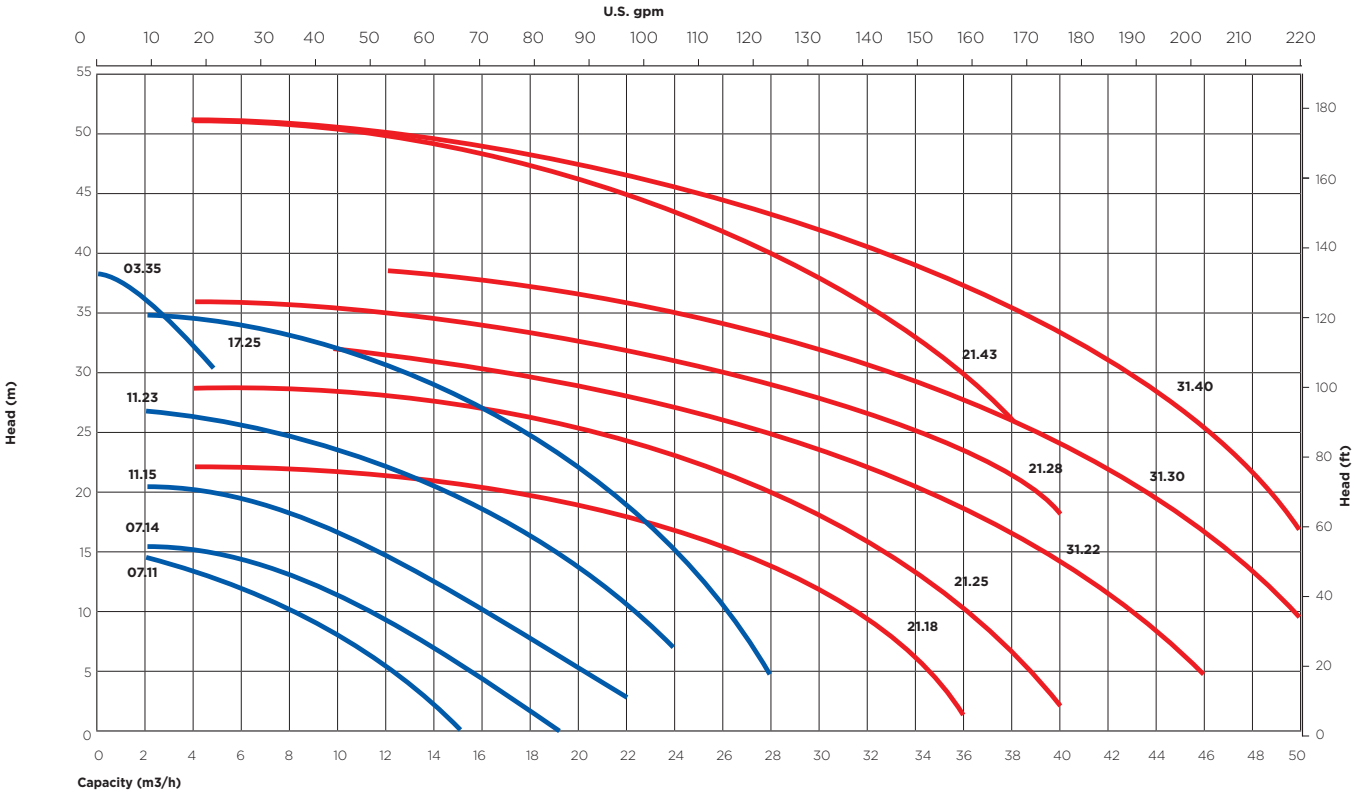

NOTES: All curves are referred to: water at 20°C - viscosity 1 °E - specific gravity 1 kg/dm^3

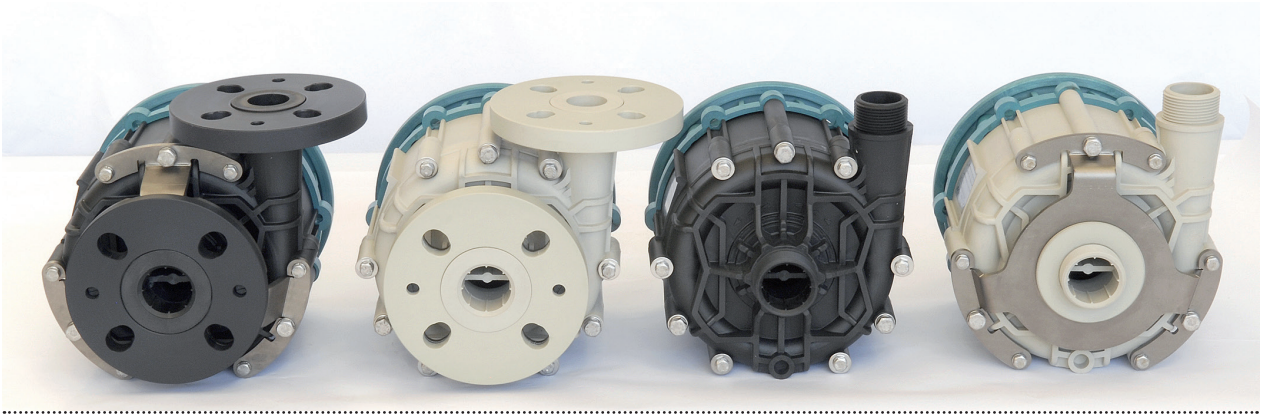

Flanged version with armour | Std flanged version | Std threaded version | Threaded version with armour

ARMOUR

A stainless steel armour was designed to fit all models to protect the front casing from accidental mechanical shocks of various nature (e.g.: starts up with vacuum in inlet piping with possible tubing excursions due to elastic brackets or thermal elongation). The guard plate is optional for the G3 size of pumps.

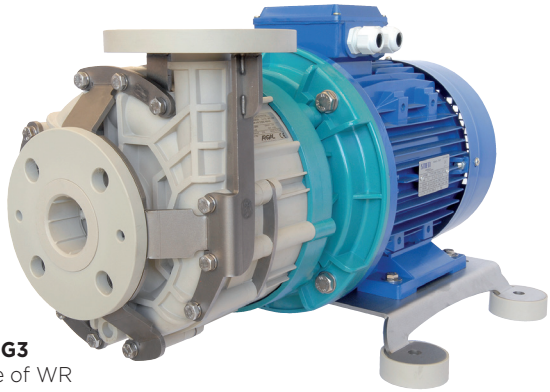

ZMR G3
made of WR

BASEPLATE

The base for anchorage of the pump is in stainless steel with ground terminals in chemical-resistant thermoplastic materials. It is supplied upon request.

"BSP" outlet cylindrical threaded connection

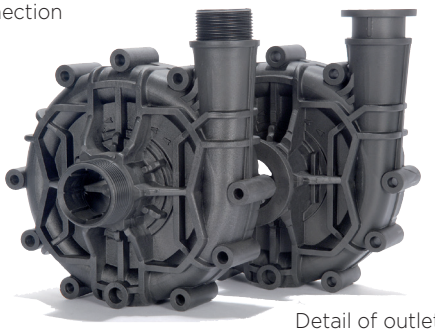

Detail of outlet flanged connection directly to the plant flange

VARIOUS CONNECTIONS

Connections with BSP cylindrical thread or NPT; flanges ISO, ANSI, JIS.

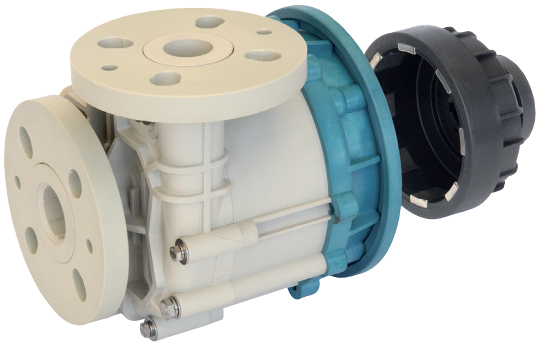

WET-END

The complete casing (or wet-end)of any mag-driven **ROUTE** pump can be easily detached from the other parts, without opening it. This is a remarkable technical alternative for spare parts.

MAG-DRIVE & MECH-SEALED CENTRIFUGAL PUMPS

PNEUMATIC AODD & METERING PUMPS PULSATION DAMPENERS

SUBMERSIBLE PUMPS

SELF-PRIMING PUMPS

VERTICAL SUMP PUMPS

ARGAL srl
Via Labirinto, 159 - 25125 BRESCIA - (Italy)
Phone +39 030 3507011 - fax +39 030 3507077
info@argal.it - **www.argalpumps.com**

cod. 01.2018 - EN